ELECTRICAL SYSTEM support ELEKTRISCHE ANLAGE Stützbock INST ELECTRIQUE appui de cable	from No / up to No	**Figure** **Bild** 99707027351 **Figure**

TADANO
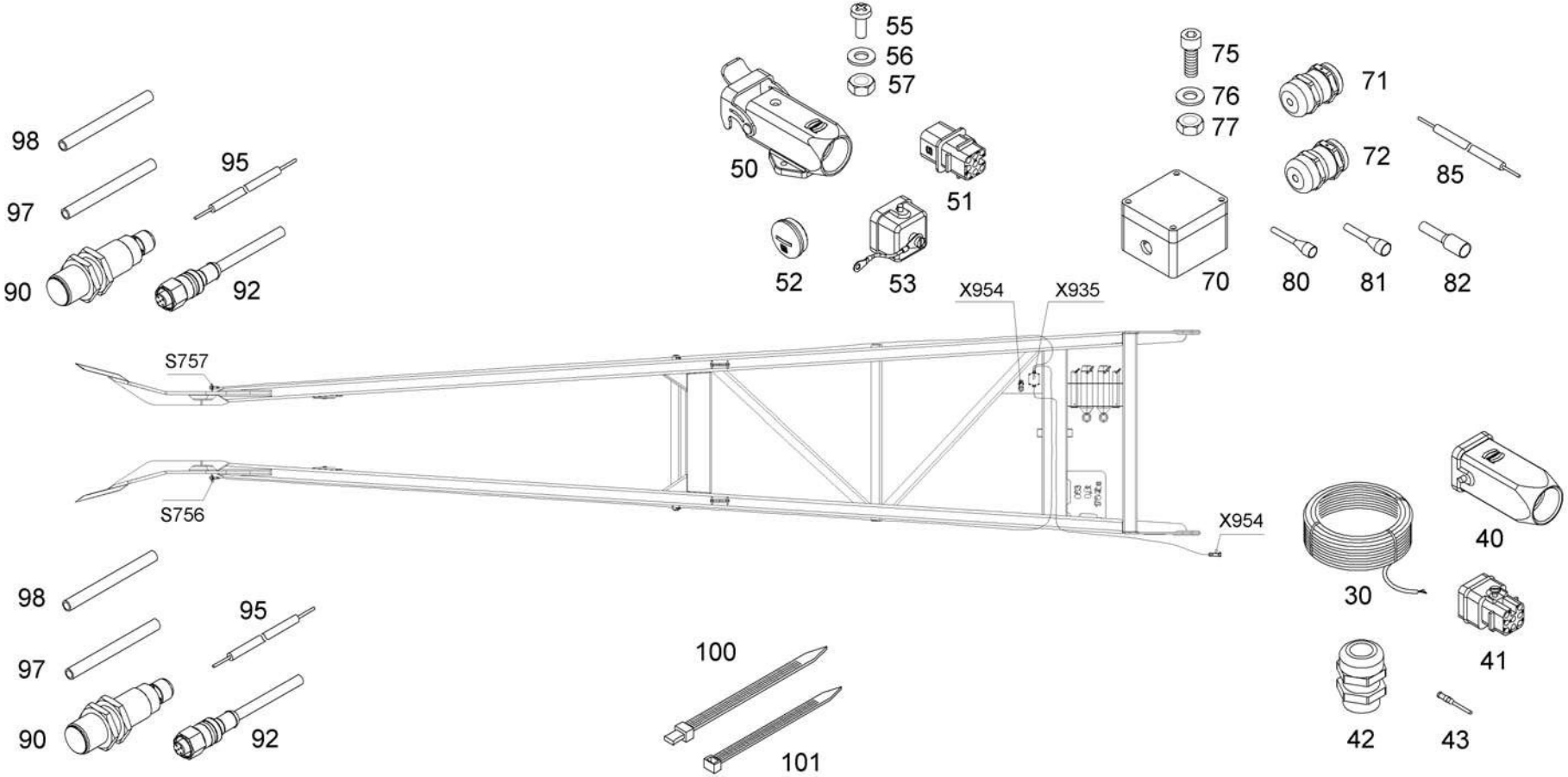
5929-07